# Split Type Filling system

3 years warranty

## CF600

304 SS Housing

## Features

- Split design, adding or deleting filling units freely.
- One controller can control 1-16 filling units.
- Each filling unit can receive stop filling signal when bottle absent.
- You can check the working status of the filling units from controller.

## Model Number

- CF600, CF600 Plus, CF600Ⅱ, CF600Ⅱ Plus

## Typical Application

- Laboratory dispensing
- Industry filling

## External Control Schematic Diagram

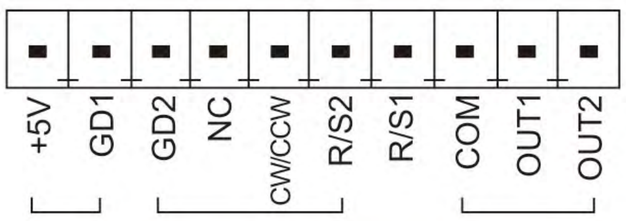


## Dimension Drawing(Unit: mm)

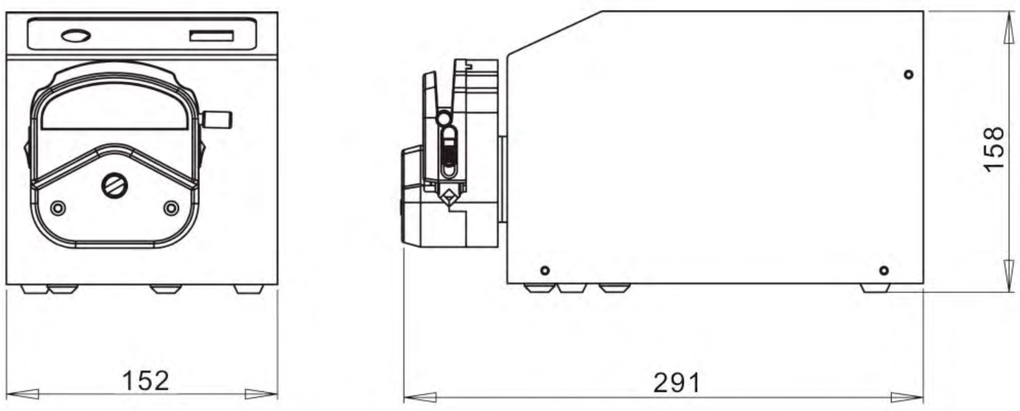


Drive Dimension Drawing

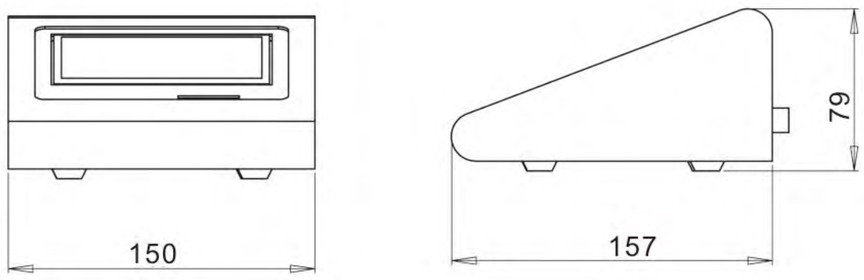


Controller Dimension Drawing

# Split Type Filling System

## CF350

3 years warranty

304 SS Housing

## Features

- Servo motor drive, precision control
- Split type design, space-saving, easy installation.
- Use low pulsation pump head to reduce the pulsation of the fluid effectively.
- Suitable for micro volume high precision filling.

## Model Number

- CF350, CF350 Plus, CF600III
- CF600 PlusIII, CF600IV, CF600 PlusIV

Control Unit

Filling Unit

## Dimension Drawing(Unit: mm)

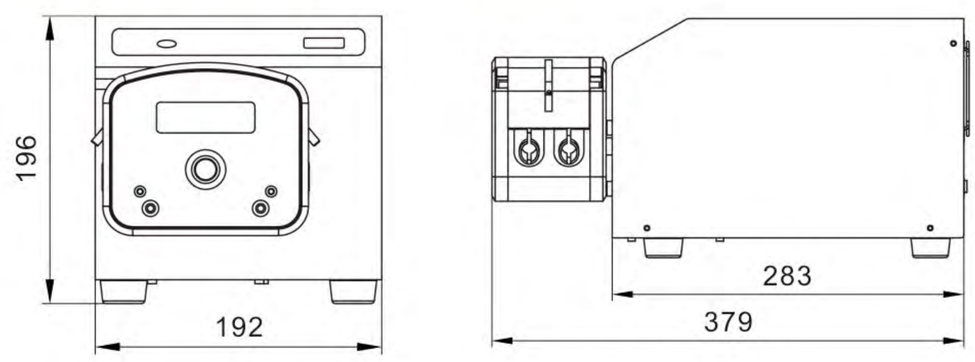


Drive Dimension Drawing

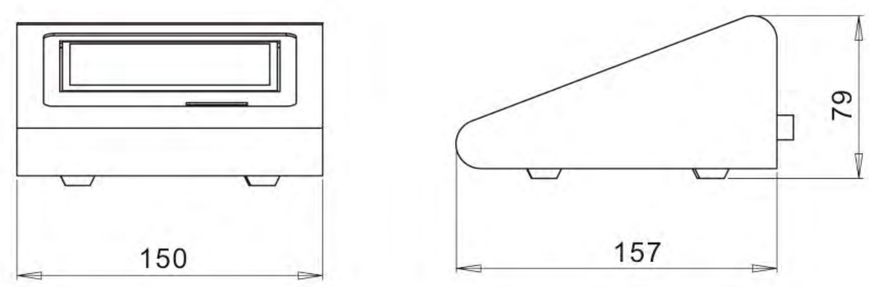


Controller Dimension Drawing

**The pump type suffixed with "Plus"support MODBUS communication protocol.**

| Drive | Pump Head | Flow Rate (mL/min) | Motor Type | Drive Dimension (L×W×H) | Power Consumption | Drive Weight |
|---|---|---|---|---|---|---|
| CF600<br>CF600Plus | YZ1515x | 0.07-2280 | Stepper motor | 237.4×152×158mm | Each unit<50W | 4.2kg |
| | YZ2515x | 1.7-1740 | | | | |
| CF600 II<br>CF600Plus II | DZ25-3L | 2.11-3600 | Stepper motor | 237.4×152×158mm | Each unit<80W | 4.95kg |
| CF600 III<br>CF600Plus III | DZ25-6L | 3.0-6000 | Servo motor | 283×192×196mm | Each unit<180W | 7.8kg |
| CF350<br>CF350Plus | DY15 | 0.1-3337 | Servo motor | 283×192×196mm | Each unit<180W | 7.8kg |
| | DY25 | 4.2-4340 | | | | |
| CF600 IV<br>CF600PlusIV | YZ35<br>YZ35-PPS | 6.9-12000 | Servo motor | 310×228×248mm | Each unit<300W | 11.9kg |

# Integrated Filling System

## DF600

### Features

- Integrated design, one controller can control 4 groups (total 16) filling units.
- It can support the production filling line, store 60 commonly used filling modes.
- Each filling unit can independently receive stop filling signal when bottle absent.

### Model Number

- DF600, DF600II, DF600 Plus, DF600 PlusII

### Typical Application

- Pharmaceutical, health product filling, diagnostic reagent dispensing.
- Food, beverage filling.
- Cosmetic filling.

## DF600 Plus

### Features

Connected with HMI, PLC etc, industrial control system, one controller can control 8 groups (total 32) filling units. It can display the details of 16 filling units in the HMI, widely used in industrial control application.

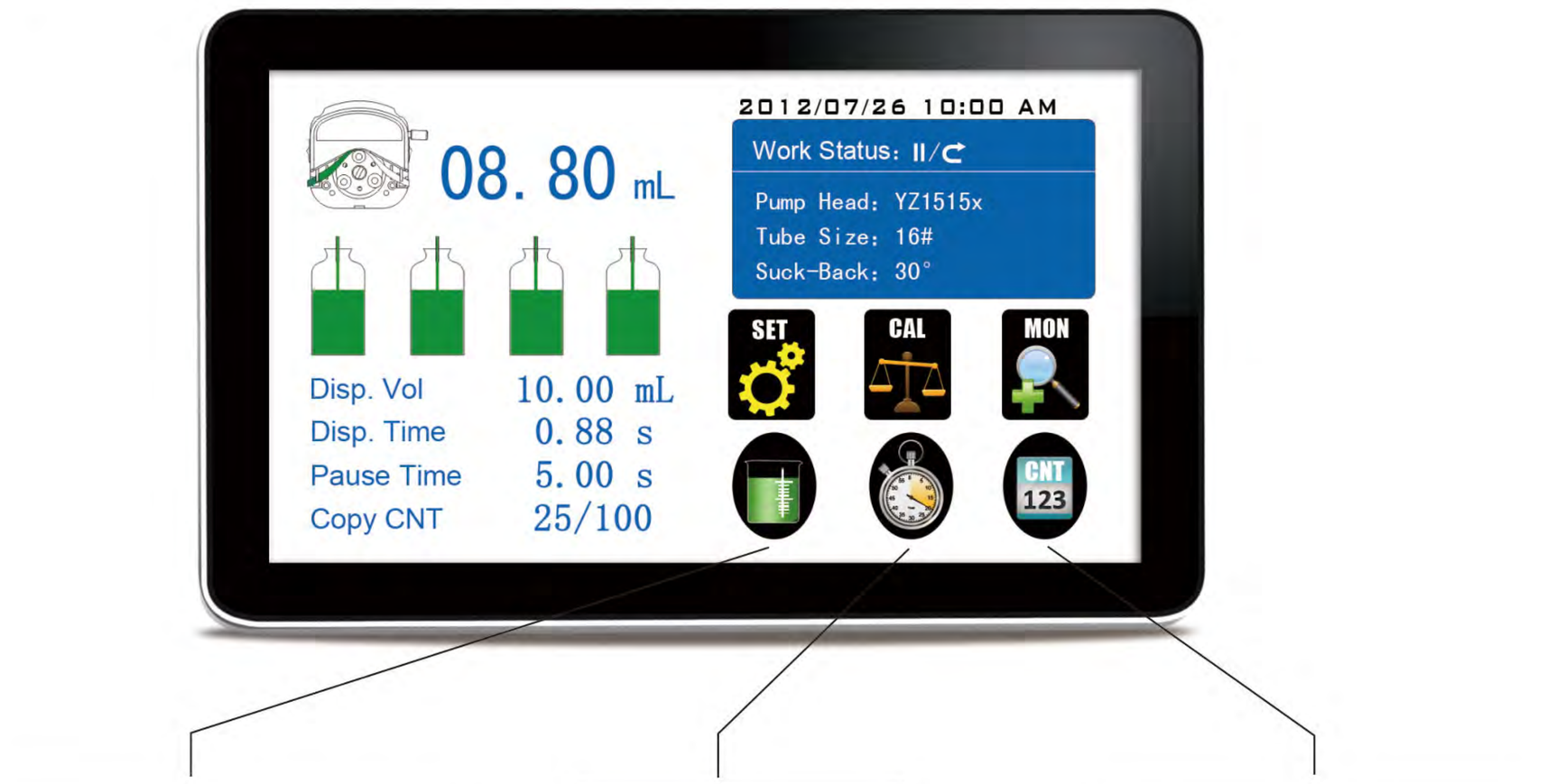


Dispensing volume interface

Dispensing time and pause time interface

Copy numbers interface

# Integrated Filling System

## DF600IV(servo motor control)

3 years warranty

304 SS Housing

## DF350(servo motor control)

3 years warranty

304 SS Housing

### Product Introduction

DF servo control series is integrated type intelligent filling system with high precision and low pulsation driven by servo motor. It is composed by control unit and integrated type filling units, each group have 4 filling units, total 16 filling units. This system use imported 4.3'' industrial grade true color display with touch screen control, can preset filling volume, filling time, pause time, copy numbers and back-suction angle. Dynamics display working status, filling data, setting parameter, system configuration display at the same screen; with intelligent calibration and online micro adjust function. Can connect foot pedal and receive switch signal, realize long-distance control. With motor working status output signal, can let other equipment realtime monitor the current filling status of peristaltic pump. This filling system use servo motor, and high precision, low pulsation pump head to make the filling precision higher, up to 0.1%-0.6%, make the micro volume and big volume high precision filling come true.

### Model Number

- DF350
- DF350 Plus
- DF600III
- DF600 PlusIII
- DF600IV
- DF600 PlusIV

### Typical Application

- Pharmaceutical, health product filling, diagnostic reagent dispensing.
- Food, beverage filling.
- Cosmetic filling.

# Integrated Filling System

## Dimension Drawing(Unit: mm)

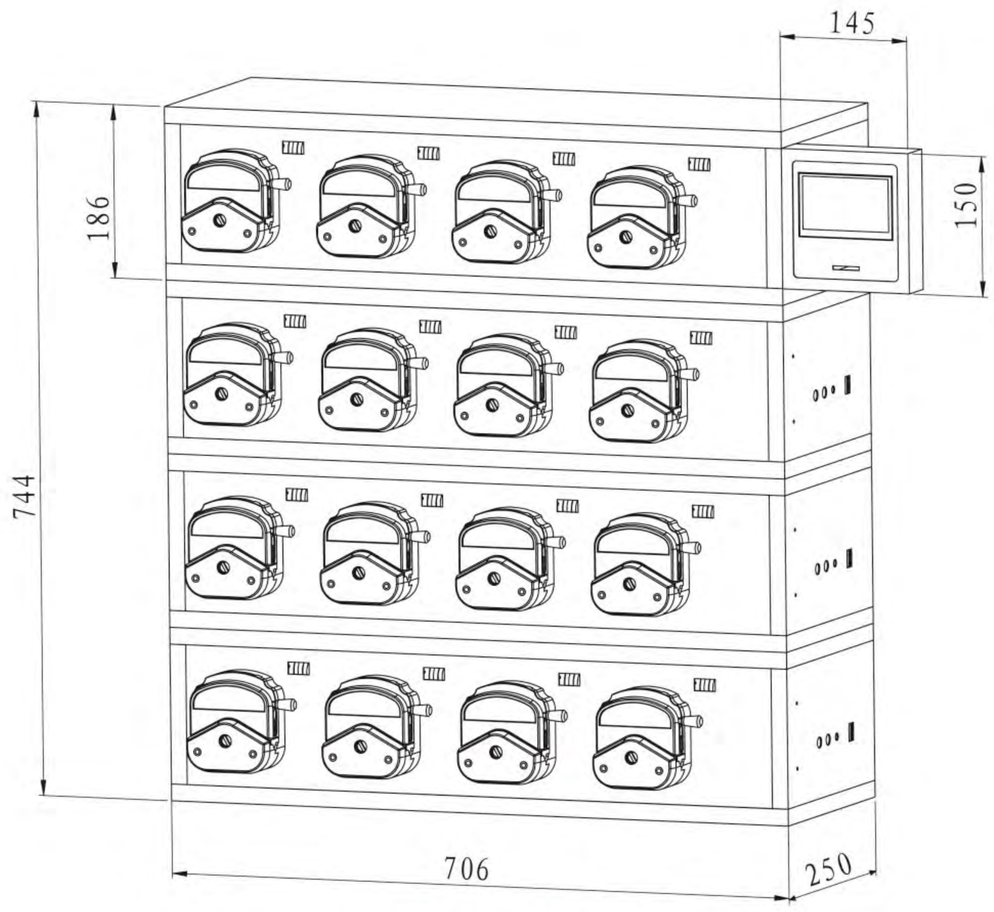


DF600 Dimension

## External Control Schematic Diagram

DF600 has filling status output signal, can be monitored by other equipments.

DF600 plus adopt standard MODBUS communication protocol,can be well connected with HMI to achieve logic control.

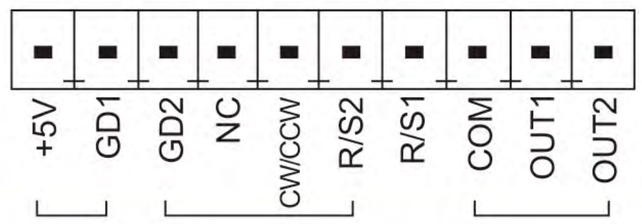


DF600 External Control Schematic Diagram

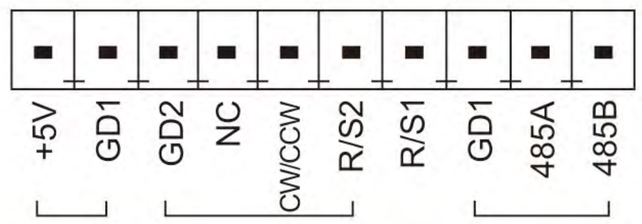


DF600plus External Control Schematic Diagram

**The pump type suffixed with "Plus" support MODBUS communication protocol**

| Drive | Pump Head | Flow Rate (mL/min) | Motor Type | Drive Dimension (L×W×H) | Power Consumption | Drive Weight |
|---|---|---|---|---|---|---|
| DF600<br>DF600Plus | YZ1515x | 0.07~2280 | Stepper motor | 706×250×186mm | Each Unit<50W | 21.8kg |
| | YZ2515x | 1.7~1740 | | | | |
| DF600 II<br>DF600Plus II | DZ25-3L | 2.11-3600 | Servo motor | 706×250×186mm | Each Unit<80W | 21.8kg |
| DF600 III<br>DF600Plus III | DZ25-6L | 3.0-6000 | Servo motor | 910×290×212mm | Each Unit<180W | 41.45kg |
| DF350<br>DF350Plus | DY15 | 0.1-3337 | Servo motor | 910×290×212mm | Each Unit<180W | 41.45kg |
| | DY25 | 4.2-4340 | | | | |
| DF600IV<br>DF600Plus IV | YZ35<br>YZ35-PPS | 6.9-12000 | Servo motor | 1056×310×248m | Each Unit<300W | 58.6kg |

Pharmaceutical Filling Machine

Cosmetic Filling Line

## Technical Specifications

| | | | |
|---|---|---|---|
| Speed range | CF350/DF350 1-350 rpm | Display | 4.3" industrial grade true color LCD screen |
| | CF350 Plus/DF350 Plus 1-350 rpm | Control method | Touch screen and mechanical keypad |
| | CF600Ⅲ/DF600Ⅲ/DF600Ⅳ 1-600 rpm | **Keypad lifetime** | **300,000 times** |
| | CF600 PlusⅢ/DF600 PlusⅢ/DF600 PlusⅣ 1-600 rpm | Start/stop, direction signal | Passive switch signal, such as foot pedal switch<br>Active switch signal: 5V, 12V, 24V for option |
| Filling volume range | 0.1-9999.99 mL | | |
| Filling time range | 0.5-9999.99 s/ DF600 Plus 0.1-9999.99 s | Output interface | Output motor working status<br>(Open-Collector output) |
| Pause time range | 0.5-9999.99 s/ DF600 Plus 0.1-9999.99 s | | |
| Filling volume resolution | 0.01 mL | Power supply | AC 220V±10% 50Hz/60Hz (standard)<br>AC 110V±10% 50Hz/60Hz (optional) |
| Time resolution | 0.01 s | | |
| Copy numbers | 1-9999,'0' means unlimited | Condition temperature | 0-40℃ |
| Back suction angle | 0-360° | Relative humidity | < 80% |
| Filling accuracy | <±0.5% | IP rate | IP31 |

## Product Composition and Flow Rate Range

| Drive | Pump Head | Pump Head Material | Tube Clamp Material | Tubing | | (Motor Speed 1~600rpm) Flow Rate mL/min |
|---|---|---|---|---|---|---|
| | | | | Tubing size | ID×Wall Thickness | |
| DF600<br>CF600<br>DF600 Plus<br>CF600 Plus | YZ1515x | PSF<br>PPS | ——— | 13# | 0.8×1.6 (mm) | 0.07~42 |
| | | | | 14# | 1.6×1.6 (mm) | 0.27~162 |
| | | | | 19# | 2.4×1.6 (mm) | 0.55~330 |
| | | | | 16# | 3.1×1.6 (mm) | 0.82~492 |
| | | | | 25# | 4.8×1.6 (mm) | 1.7~1020 |
| | | | | 17# | 6.4×1.6 (mm) | 2.9~1740 |
| | | | | 18# | 7.9×1.6 (mm) | 3.8~2280 |
| | YZ2515x | PSF<br>PPS | ——— | 15# | 4.8×2.4 (mm) | 1.7~1020 |
| | | | | 24# | 6.4×2.4 (mm) | 2.9~1740 |
| DF600Ⅱ<br>CF600Ⅱ<br>DF600 PlusⅡ<br>CF600PlusⅡ | DZ25-3L | Aluminum alloy/PPS | PP | 15# | 4.8×2.4 (mm) | 2.11~1264 |
| | | | | 24# | 6.4×2.4 (mm) | 3.85~2310 |
| | | | | 35# | 7.9×2.4 (mm) | 5.08~3050 |
| | | | | 36# | 9.6×2.4 (mm) | 6~3600 |
| DF600Ⅲ<br>CF600Ⅲ<br>DF600 PlusⅢ<br>CF600 PlusⅢ | DZ25-6L | Aluminum alloy/PPS | PP | 15# | 4.8×2.4 (mm) | 3~1800 |
| | | | | 24# | 6.4×2.4 (mm) | 5.5~3300 |
| | | | | 35# | 7.9×2.4 (mm) | 8~4800 |
| | | | | 36# | 9.6×2.4 (mm) | 10~6000 |
| DF600Ⅳ<br>CF600Ⅳ<br>DF600 PlusⅣ<br>CF600 PlusⅣ | YZ35-PPS | PPS | PP | 26# | 6.4×3.3 (mm) | 6.9~4200 |
| | | | | 73# | 9.6×3.3 (mm) | 12.3~7400 |
| | | | | 82# | 12.7×3.3 (mm) | 20~12000 |

| Drive | Pump Head | Pump Head Material | Tube Clamp Material | Tubing | | (Motor Speed1~350rpm) Flow Rate mL/min |
|---|---|---|---|---|---|---|
| | | | | Tubing | ID×Wall Thickness | |
| DF350<br>CF350<br>DF350 Plus<br>CF350 Plus | DY15 | Aluminum alloy | PP | 13# | 0.8×1.6 (mm) | 0.1~48 |
| | | | | 14# | 1.6×1.6 (mm) | 0.6~223 |
| | | | | 19# | 2.4×1.6 (mm) | 1.3~448 |
| | | | | 16# | 3.1×1.6 (mm) | 2~723 |
| | | | | 25# | 4.8×1.6 (mm) | 4.7~1626 |
| | | | | 17# | 6.4×1.6 (mm) | 6.4~2230 |
| | | | | 18# | 7.9×1.6 (mm) | 9.5~3337 |
| | DY25 | Aluminum alloy | PP | 15# | 4.8×2.4 (mm) | 4.2~1480 |
| | | | | 24# | 6.4×2.4 (mm) | 7.6~2670 |
| | | | | 35# | 7.9×2.4 (mm) | 10~3600 |
| | | | | 36# | 9.6×2.4 (mm) | 12.4~4340 |

## Filling Volume Reference (Media is water)

| Drive | Pump Head | Tubing | Filling Volume (mL) | Filling Time (s) | Accuracy (±%) | Output (pcs/min) | Motor Speed (rpm) |
|---|---|---|---|---|---|---|---|
| DF600<br>CF600<br>DF600 Plus<br>CF600 Plus | YZ1515x<br>YZ2515x | 13# | 0.1 | 0.5 | ±5ul | 40 | 204.083 |
| | | 13# | 0.3 | 0.7 | 1.5 | 35 | 426.251 |
| | | 13# | 0.5 | 1 | 0.8 | 30 | 516.081 |
| | | 13# | 1 | 2 | 0.5 | 20 | 517.152 |
| | | 14# | 2 | 1 | 1 | 30 | 446.724 |
| | | 14# | 3 | 1.5 | 0.8 | 24 | 446.479 |
| | | 19# | 5 | 1.2 | 1 | 27 | 454.919 |
| | | 16# | 7 | 1 | 0.5 | 30 | 457.705 |
| | | 25#/15# | 10 | 1 | 1 | 30 | 303.426 |
| | | 25#/15# | 15 | 1 | 0.8 | 30 | 461.273 |
| | | 25#/15# | 20 | 1.2 | 0.5 | 27 | 518.945 |
| | | 17#/24# | 30 | 1.2 | 0.8 | 27 | 462.725 |
| | | 17#/24# | 50 | 2 | 0.5 | 20 | 461.595 |
| | | 18# | 80 | 2.5 | 0.5 | 17 | 427.274 |
| | | 18# | 100 | 3 | 0.5 | 15 | 446.583 |
| DF600Ⅱ<br>CF600Ⅱ<br>DF600 PlusⅡ<br>CF600PlusⅡ | DZ25-3L | 15# | 16 | 1 | 0.5 | 30 | 454.976 |
| | | 24# | 30 | 1.2 | 0.5 | 27 | 389.610 |
| | | 35# | 150 | 4 | 0.5 | 12 | 442.913 |
| | | 36# | 200 | 4 | 0.5 | 12 | 500.000 |
| DF350<br>CF350<br>DF350 Plus<br>CF350 Plus | DY15 | 14# | 0.5 | 0.5 | 0.3 | 60 | 94.1915 |
| | | 14# | 1 | 1 | 0.4 | 30 | 94.1915 |
| | | 14# | 2 | 1 | 0.6 | 30 | 188.383 |
| | | 19# | 3 | 1 | 0.3 | 30 | 140.625 |
| | | 16# | 5 | 1 | 0.5 | 30 | 145.278 |
| | | 25# | 10 | 1 | 0.3 | 30 | 129.143 |
| | | 25# | 15 | 1 | 0.4 | 30 | 193.715 |
| | | 17# | 30 | 1 | 0.4 | 30 | 282.530 |
| | | 18# | 100 | 2.5 | 0.3 | 17 | 251.730 |
| | DY25 | 15# | 10 | 1 | 0.3 | 30 | 141.911 |
| | | 24# | 30 | 1 | 0.5 | 30 | 235.972 |
| | | 35# | 70 | 1.2 | 0.4 | 27 | 340.466 |
| | | 36# | 100 | 2 | 0.2 | 20 | 241.935 |
| DF600Ⅲ<br>CF600Ⅲ<br>DF600 PlusⅢ<br>CF600 PlusⅢ | DZ25-6L | 15# | 80 | 4 | 0.4 | 12 | 400.000 |
| | | 24# | 150 | 4 | 0.4 | 12 | 409.090 |
| | | 35# | 200 | 3.2 | 0.5 | 14 | 468.750 |
| | | 36# | 300 | 3.5 | 0.5 | 13 | 514.285 |
| DF600Ⅳ<br>CF600Ⅳ<br>DF600 PlusⅣ<br>CF600 PlusⅣ | YZ35-PPS | 26# | 150 | 3 | 0.5 | 15 | 428.570 |
| | | 73# | 300 | 3 | 0.5 | 15 | 486.499 |
| | | 82# | 500 | 3 | 0.5 | 15 | 500.000 |